7.4 cu. ft. Front Load Long Vent Dryer

- 7.4 cu. ft. Ultra Large Capacity
- AI Fabric Sensor / Smart Pairing™
- 9 Cycles / 10 Options
- Sensor Dry System
- FlowSense® Duct Clogging Indicator
- LG ThinQ® Technology (Wi-Fi)



Image Not FInal

COLOR AVAILABILITY
○ DLE3420WL (Electric) – White

CAPACITY & MATCHING WASHER	
Capacity (cu. ft.)	7.4
Matching Washer	WM3400CW
APPEARANCE	
Electronic Controls with LED Display	Yes
Touch Buttons	Yes
Dial-A-Cycle™	Yes
DRYER CYCLES	
Number of Cycles	9
Sensor Dry Cycles	AI Dry, Normal, Heavy Duty, Bedding, Perm Press, Delicates, Downloaded Cycle
Manual Dry Cycles	Speed Dry, Air Dry
DRYER OPTIONS	
Number of Options	10
Options	Wrinkle Care, Control Lock, Signal (Sound), Wi-Fi, Remote Start, Energy Saver, Damp Dry Signal
Temperature Settings	High, Medium High, Medium, Low, Ultra Low
Drying Levels	Very Dry, More Dry, Normal Dry, Less Dry, Damp Dry
Manual Dry Times	60 min., 40 min., 20 min., More Time / Less Time
FABRIC CARE	
Steam Technology	No
Sensor Dry	Yes
Precise Temperature Control with Variable Heater	TBD

CONVENIENCE	
Drum Light	No
Control Lock	Yes
FlowSense® Duct Clogging Indicator	Yes
End of Cycle Signal	Yes
Remaining Time Display / Status Indicator(s)	Yes
Reversible Door	Yes
Venting Option	4 Way Venting
3 Minute Installation Check	Yes
Leveling Legs	Yes
ADA Compliant	No
SMART FEATURES	
Wi-Fi Enabled	Yes
ThinQ® Technology	Yes
ThinQ Care™	Yes
SmartDiagnosis™	Yes
Remote Start (On / Off)	Yes
Remote Monitoring & Notifications	Yes
MATERIALS AND FINISHES	
Drum Material	Aluminized Alloy Steel
Door / Rim	Glass / White
Door Cover	Clear Round Cover
TECHNICAL SPECS	
Electrical Requirements	240V, 30 Amps, 60Hz
Power Outlet Location	Within 48" of Either Side
Plug Type	4-Wire (Cord Required)
ENERGY STAR® Certified	Yes
Combined Energy Factor (CEF)	3.94

PRELIMINARY PRELIMINARY PRELIMINARY PRELIMINARY PRELIMINARY PRELIMINARY

PRELIMINARY PRELIMINARY PRELIMINARY PRELIMINARY PRELIMINARY PRELIMINARY

OPTIONAL ACCESSORIES	
Pedestal	WDP6W
Pedestal (W x H x D)	27" x 13 5/8" x 28"
ADA-Compliant Pedestal Riser	WDPS2W
ADA-Compliant Pedestal Riser (W x H x D)	27" x 5 1/8" x 27"
Stacking Kit	KSTK4
Drying Rack	3750EL1001A
Side Vent Kit	3911EZ9131X (Replaces 383EEL9001B)

DIMENSIONS	
Product (W x H x D)	27" x 38 5/8" x 29 3/4"
Depth with Door Open	51 7/8"
Cutout Dimensions (W x H x D)	29" x 38 5/8" x 34 3/4" (31 3/4" D for Side or Bottom Venting)
Carton Dimensions (W x H x D)	29" x 43 1/8" x 31 3/8"
Approx. Weight (Product / Carton)	112.61 lbs. / 119.22 lbs.
LIMITED WARRANTY	
Parts and Labor	1 Year
Dryer Drum	10 Years (Parts Only)

DIMENSIONS / CLEARANCES

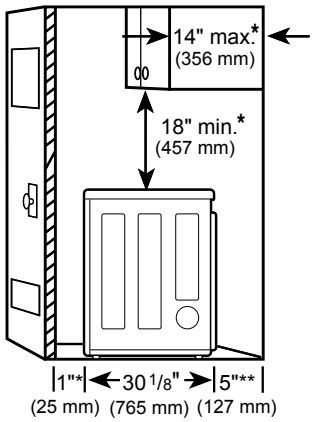

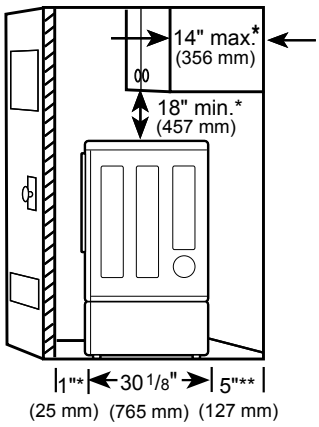

SPACING FOR RECESSED AREA OR CLOSET INSTALLATION

The following clearances are recommended for this dryer. This dryer has been tested for clearances of 1 inch (2.5 cm) on the sides and rear. Recommended clearances should be considered for the following reasons:

- Additional clearances should be considered for ease of installation and servicing.
- Additional clearances should be considered on all sides of the dryer to reduce noise transfer. For closet installation, with a door, minimumventilation openings in the top and bottom of the door are required. Louvered doors with equivalent ventilation openings are acceptable.

Closet Ventilation Requirements

Closets with doors must have both an upper and lower vent to prevent heat and moisture buildup in the closet. One upper vent opening with a minimum opening of 48 sq. in. (310 cm^2) must be installed no lower than 6 feet above the floor. One lower vent opening with a minimum opening of 24 sq. in. (155 cm^2) must be installed no more than one foot above the floor. Install vent grills in the door or cut down the door at the top and bottom to form openings. Louvered doors with equivalent ventilation openings are also acceptable.

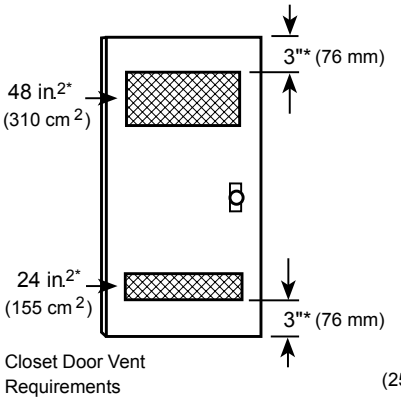

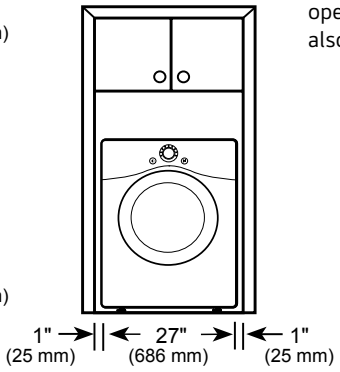

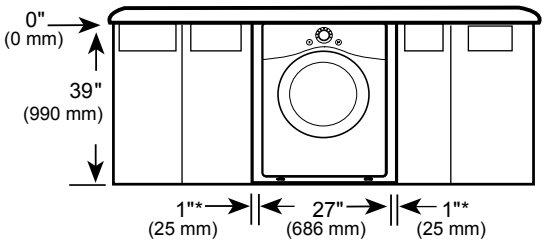

PRELIMINARY PRELIMINARY PRELIMINARY PRELIMINARY PRELIMINARY PRELIMINARY

DIMENSIONS / CLEARANCES

INSTALLATION SPACING FOR RECESSED AREA OR CLOSET, WITH STACKED WASHER AND DRYER

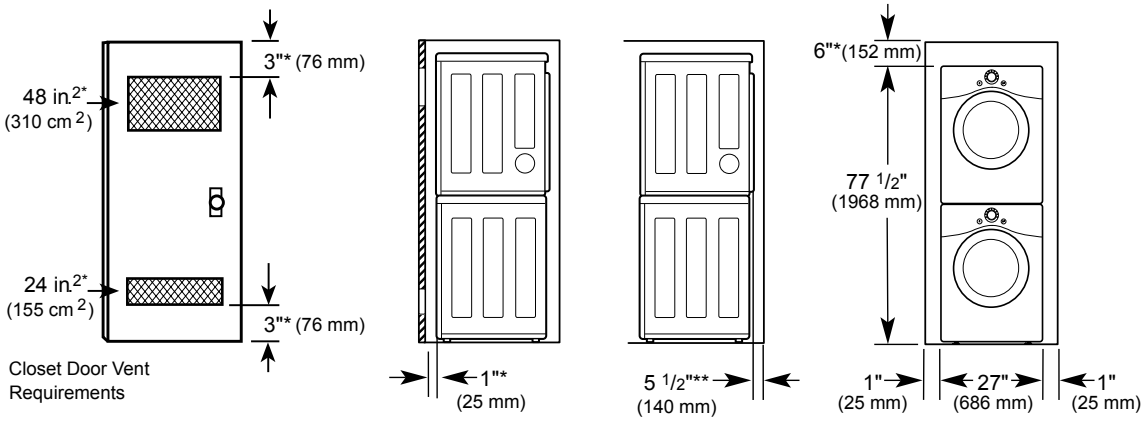

* Required spacing

** For side or bottom venting, 2-inch (51 mm) of spacing is allowed.

INSTALLATION SPACING FOR CABINET

For cabinet installation with a door, minimum ventilation openings in the top of the cabinet are required.

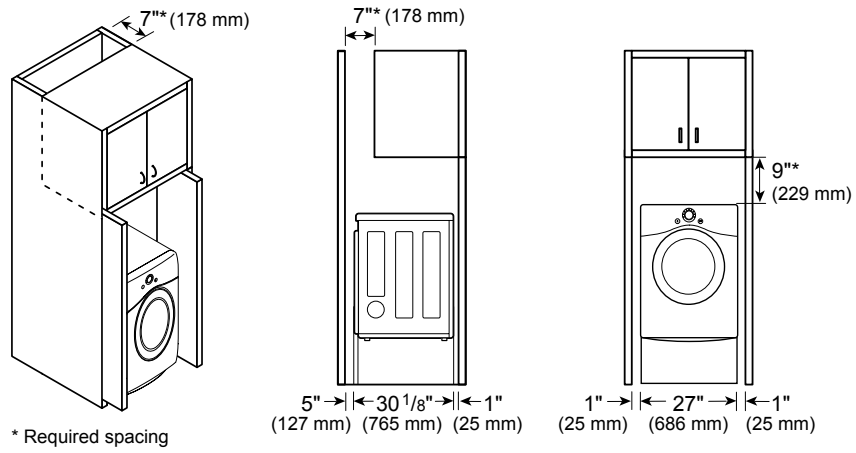

* Required spacing

PRELIMINARY PRELIMINARY PRELIMINARY PRELIMINARY PRELIMINARY PRELIMINARY

VENTING THE DRYER

- If connecting to existing ductwork, make sure it is suitable and clean before installing the dryer.
- Venting must conform to local building codes.
- Gas dryers MUST exhaust to the outdoors.
- Use only 4-inch (10.2 cm) rigid, semi-rigid or flexible metal ductwork inside the dryer cabinet and for venting outside.
- The exhaust duct must be 4 inches (10.2 cm) in diameter with no obstructions. The exhaust duct should be kept as short as possible. Make sure to clean any old ducts before installing your new dryer.
- Rigid, semi-rigid or flexible metal ducting is recommended for use between the dryer and the wall. All non-rigid metal transition duct must be UL-listed. Use of other materials for transition duct could affect drying time.
- Ductwork is not provided with the dryer. You should obtain the necessary ductwork locally. The vent hood should have hinged dampers to prevent backdraft when the dryer is not in use.
- The total length of flexible metal duct must not exceed 8 ft. (2.4 m).

NOTE:

- Deduct 6 ft. (1.8 m) for each additional elbow. Do not use more than five 90° elbows.

ROUTING AND CONNECTING DUCTWORK

NOTE:

Follow the guidelines below to maximize drying performance and reduce lint buildup and condensation in the ductwork. Ductwork and fittings are NOT included and must be purchased separately.

- Use 4-inch (10.2 cm) diameter rigid, semi-rigid or flexible metal ductwork.
- The exhaust duct run should be as short as possible.
- Use as few elbow joints as possible.
- The male end of each section of exhaust duct must point away from the dryer.
- Use duct tape on all duct joints.
- Insulate ductwork that runs through unheated areas in order to reduce condensation and lint buildup on duct surfaces.
- Incorrect or inadequate exhaust systems are not covered by the dryer warranty. Dryer failures or service required because of such exhaust systems will not be covered by the dryer warranty.

DUCTWORK

Wall Cap Type	Number of 90° Elbows	Maximum length of 4-inch diameter rigid metal duct
Recommended  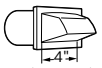	0	200 ft. (61 m)
	1	185 ft. (56.4 m)
	2	175 ft. (53.3 m)
	3	165 ft. (50.3 m)
	4	155 ft. (47.2 m)
	5	145 ft. (44.2 m)
Use only for short run installations 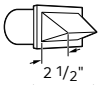	0	175 ft. (53.3 m)
	1	165 ft. (50.3 m)
	2	155 ft. (47.2 m)
	3	145 ft. (44.2 m)
	4	135 ft. (41.1 m)
	5	125 ft. (38.1)

NOTE:

- Deduct 6 ft. (1.8 m) for each additional elbow. Do not use more than 90° elbows indicated.

Incorrect or inadequate exhaust systems are not covered by the dryer warranty. Dryer failures or service required because of such exhaust systems will not be covered by the dryer warranty

CORRECT VENTING

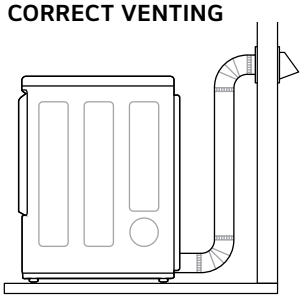

INCORRECT VENTING

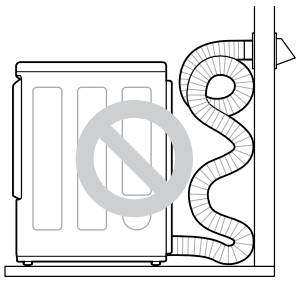

PRELIMINARY PRELIMINARY PRELIMINARY PRELIMINARY PRELIMINARY PRELIMINARY

CONNECTING ELECTRIC DRYERS

Electrical Requirements for Electric Models Only

- This dryer must be connected to a grounded metal, permanent wiring system, or an equipment-grounding conductor must be run with the circuit conductors and connected to the equipment-grounding terminal or lead on the dryer.
- The dryer has its own terminal block that must be connected to a separate 240 VAC, 60-Hertz, single-phase circuit, fused at 30 amperes (the circuit must be fused on both sides of the line). ELECTRICAL VOLTAGE LISTED ON THE NAMEPLATE. DO NOT CONNECT THE DRYER TO 110-, 115-, OR 120-VOLT CIRCUIT.
- If the branch circuit to dryer is 15 ft. (4.5 m) or less in length, use UL (Underwriters Laboratories) listed No.-10 AWG wire (copper wire only), or as required by local codes. If over 15 ft. (4.5 m), use UL-listed No.-8 AWG wire (copper wire only), or as required by local codes. Allow sufficient slack in wiring so the dryer can be moved from its normal location when necessary.
- The power cord (pigtail) connection between the wall receptacle and the dryer terminal block IS NOT supplied with the dryer. Type of pigtail and gauge of wire must conform to local codes

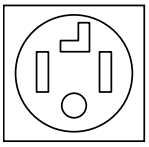

FOUR-WIRE POWER CORD

- A 4-wire connection is required for all mobile and manufactured home installations, as well as all new construction after January 1, 1996.
- A UL-listed strain relief is required.
- Use a 30-amp, 240-volt, 4-wire, UL-listed power cord with #10 AWG-minimum copper conductor and closed loop or forked terminals with upturned ends.

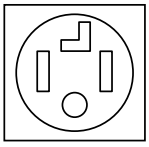

FOUR-WIRE DIRECT WIRE

- A 4-wire connection is required for all mobile and manufactured home installations, as well as all new construction after January 1, 1996.
- A UL-listed strain relief is required.
- Use UL-listed 4-wire #10 AWG minimum copper conductor cable. Allow at least 5 ft. (1.5 m) of wire to allow for removal and reinstallation of the dryer.

ELECTRIC CONNECTION LOCATIONS

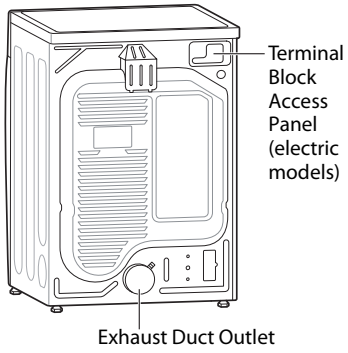

LG Business Solutions

© 2026 LG Electronics USA, Inc. All rights reserved. "LG Life's Good" is a registered trademark of LG Corp. All other product and brand names are trademarks or registered trademarks of their respective owners. Design, features and specifications are subject to change without notice. Non-metric weights and measurements are approximate. Some features may require Internet access. Content and services may vary by product and are subject to change without notice.